Q1. Two identical cell of emf 1.5 V each joined in a parallel provide supply to an external circuit consisting of two resistance of 17Ω each joined in a parallel. A very high resistance voltmeter reads the terminal voltage of cell to be 1.4V. Calculate the internal resistance of each cell.

Q2. Four identical cells, each of emf 2 V are joined in a parallel providing supply of current to external circuit consisting of 15Ω resistors joined in parallel. The terminal voltage of the cells, as read by an ideal voltmeter is 1.6 volt. Calculate the internal resistance of each cell.

Q3. Two cells E1 and E2 of emf 4V and 8V having internal resistance 0.5 Ω and 1.0 Ω respectively are connected in opposition to each other. The combination is connected in series with resistance of 4.5Ω and 3.0Ω. another resistance of 6.0Ω is connected in parallel across the 3Ω resistor.

(a) Draw the circuit diagram

(b)Calculate the total current flowing in circuit.

Q4. A cell of unknown emf E and internal resistance r, two unknown resistance R1 and R2 (R2> R1) and a perfect ammeter are given. The current in the circuit is measured in five different situations (i) without any external resistance in the circuit, (ii) without any external resistance R1 only (iii)with only resistance R2 only (iv)With both R1 and R2 used in series combination and (v) With r1 and R2 used in parallel combination. The current obtained in the five cases are 0.42A, 0.6A, 1.05A, 1.4A and 4.2A, but not necessarily in the same order. Identify the currents in the five cases listed above and calculate E, r,R1 and R2. (E=4.2V, R1=3 ohm, r= 1 ohm R2=6 ohm)

Q5. Describe the formula for the equivalent EMF and internal resistance for the parallel combination of two cells with emf's E1 and E2 and internal resistance r1 and r2 respectively. What is the corresponding formula for the series combination? Two cells of emf 1V, 2V and internal resistance 2Ω and 1Ω respectively are connected in (i) series, (ii) parallel. What should be the external resistance in the circuit so that the current through the resistance be the same in the two cases? In which case more heat is generated in the cells?

Q6. Two wires of equal length one of copper and other of the maganin have the same resistance which wire is thicker?

Q7. the length of potentiometer wire is 600 cm and it carries a current of 40mA. For a cell of emf. 2V and internal resistance 10Ω the null point is found to be at 500m. If a voltmeter is connected across the cell, the balancing length is decreased by 10 cm. Find (i) The resistance of whole wire (ii) reading of voltmeter and (iii) resistance of voltmeter.

Q8. Two cells of emf's 1.5V and 2 V having internal resistance 2Ω and 1Ω respectively., have their negative terminals joined by a wire of 6Ω and +ve terminals by a wire of 4 Ω resistance A third resistance wire of 8 Ω connects middle points of these wires. Draw the circuit diagram. Using Kirchhoff's laws, find the potential difference at the end of this third wire.

Q9. A battery of emf 12.0 V and internal resistance 0.5Ω is to be charged by a battery charger which supplies 110 V d.c. How much resistance must be connected in series with the battery to limit the charging current to 5.0 A? What will be the p.d. across the terminals of the battery during charging?

Q10. A current of 2mA is passed through a colour coded carbon resister with first, second and third rings of yellow, green and orange colours. What is voltage drop across the register?

Q11. A wire of 10 ohm resistance is stretched to thrice its original length. What will be its (i) new resistivity and (ii) new resistance?

Q12. A uniform copper wire of mass 2.23×10^{-3}kg carries a current of 1A when 1.7V is applied across it. Calculate its length and area of cross section .If the wire uniformly stretched to double its length. Calculate the new resistance. Density of copper is 8.92×10^{3} kg m^{-3} and resistivity is 1.7×10^{-8} Ω m.

Q13. Two cells of emf 6V and 12 V and internal resistance 1Ω and 2 Ω respectively are connected in parallel so as to send current in the same direction through an external resistance of 15 Ω.

(i) Draw the circuit diagram

(ii) using Kirchhoff's law calculate

(a) current through each branch of the circuit

(b)p.d across the 15 Ω resistance

Q14 . In a potentiometer, a standard cell of emf 5V and of negligible resistance maintains a steady current through the potentiometer wire of length of 1m. Two primary cell of emf E1 and E2 are joined in series with (i)same polarity and (ii)opposite polarity.

The combination is connected through a galvanometer and a jockey to the potentiometer. The balancing length in the two cases are found to be 350 cm and 50 cm respectively.

(i)Draw the necessary circuit diagram

(ii) find the value of the emf's of the two cells.

Q15. A potential difference V is applied across a conductor of length L and diameter D. how are the electric field E and the resistance R of conductor affected when it turn (i) V is halved, (ii) L is halved and (iii) D is doubled ?

Q16. One metre long metallic wire is broken into two equal parts P and Q. the part P is uniformly extended into another wire R. The length of R is twice the length of P and resistance of R is equal to that of Q. Find the ration of the length P and Q.

Q17. I a metre-bridge experiment, with a resistance R1 in the left gap and a resistance X in the right gap, null point is obtained at 40cm from the left end. With resistance R2 in the left gap and the same resistance X in the right gap, null point is obtained at 50cm from the left end. Where will be the null point if R1 and R2 are put in series in the left gap containing X?

Q18. Two wires A and B of the same material have their lengths in the ration 1:5 and diameters in the ration 3:2. If the resistance of the wire B is 180 Ω, find the resistance of wire A.

Q19. A uniform wire is cut into four segments. Each segment is twice as long as their earlier segment. If the shortest segment has a resistance of 4Ω, find the resistance of the original wire.

Q20. A voltage of 30 V is applied across a colour coded carbon resistor with first, second and third rigs of blue, black and yellow colours. What is the current flowing through the resistor.

Q21. The resistance of a coil used in a platinum- resistance thermometer at 0^0C is 3.00Ω and at 100^0C is 3.75Ω. Its resistance at an unknown temperature is measured as 3.15Ω. calculate the unknown temperature.

Q22. The temperature coefficient of a resistance wire is 0.0012.5 $^0C^{-1}$. At 300K resistance is 1Ω.At what temperature the resistance of the wire will be 2Ω.

Q23. A cell gives a balance point with 85cm a potentiometer wire. When the terminals of the cell are shorted through a resistance of 7.5Ω, the balance is obtained at 75cm. find the internal resistance of the cell.

Q24. A cell of emf E and internal resistance r is connected across a variable external resistor R. plot graphs to show variation of (i) E with R (ii) Terminal p.d of the cell V with R.

Q25. Calculate the temperature at which the resistance of conductor becomes 20% more than its resistance at 27^0C. the value of the temperature coefficient of resistance of the conductor is $2.0x10^{47}$K.

Q26. The temperature coefficient of a resistivity of copper is 0.004 ^{0}C-1. Find the resistance of a 5m long copper wire of diameter 0.2 mm at 100^0C, if the resistivity of copper at 0^0C is $1.7x10^{-8}$Ω.

Q27.The current through a conductor is 1 ampere when the temperature is 0^0C and 0.7 ampere when the temperature is 100^0 C. What would be current when the temperature of conductor is 1200^0 C?

Q28. A set of identical resistors, each of resistance is RΩ, when connected in series have an effective resistance XΩ and when the resistors are connected in parallel, their effective resistance is YΩ. Find the relation between R,X and Y.

Q29. The length and radii of three wires of some metal are in the ratio of 2:3:4 and 3:4:5 respectively. They are joined in parallel and included a circuit having 5A current. Find current through each wire.

Q30. In a potentiometer, a standard cell of emf 5V and of negligible resistance maintains a steady current through the potentiometer wire of length of 1m. Two primary cell of emf E1 and E2 are joined in series with (i)same polarity and (ii)opposite polarity.

The combination is connected through a galvanometer and a jockey to the potentiometer. The balancing length in the two cases are found to be 350 cm and 50 cm respectively.

(i)Draw the necessary circuit diagram

(ii) find the value of the emf's of the two cells.

Q31. Name any one material having a small value of temperature coefficient of resistance. Write one use of this the material .

Q32. The length of a potentiometer wire is 600cm and it carries 40mA current. For a cell of emf 2 volt and internal resistance is 10 ohm, the null point is found at 500 cm. If a voltmeter is connected across the cell, the balancing length of the wire is decreased by 10cm. find (i) the resistance of the whole wire, (ii) reading of voltmeter and (iii) resistance of voltmeter.

Q33. A battery of emf 10V is connected to resistances as shown in the following Fig. find the potrntial difference between the points A and B

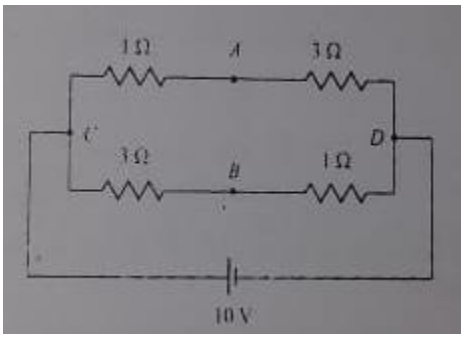

Q34. Find the equivalent resistance of the circuit shown in the following fig. between the points P and Q. Each resistor has a resistance r.

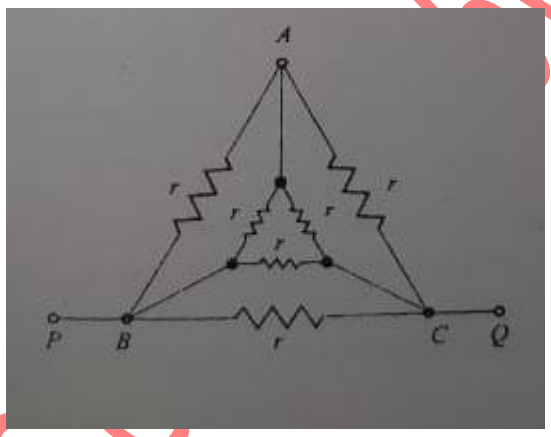

Q35**. Calculate the resistance between points A and B for the following networks.**

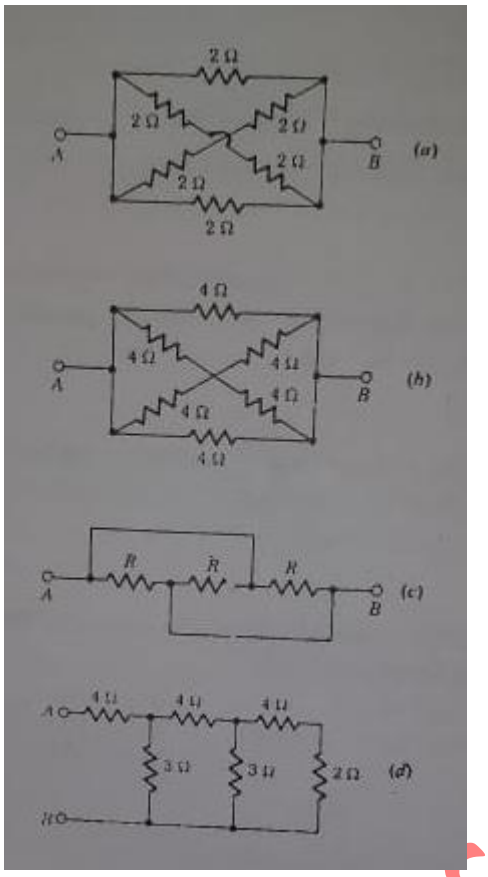

Q36. Find the current drawn from a cell of emf 1 V and internal resistance 2/3Ω connected to the network given below

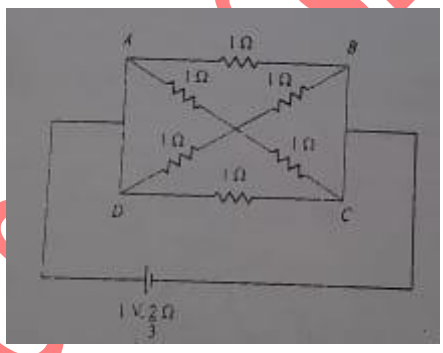

Q37. In the circuit shown in the following figure a potential difference the points A and B is 3V. Find the value of resistance R.

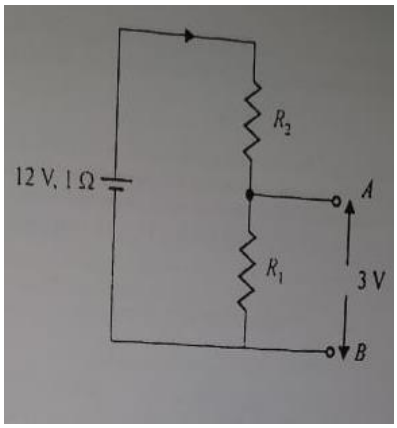

Q38. A series combination of a 2kΩ resistor and 1kΩ resistor, is connected across a battery of emf6V and negligible internal resistance. The potential drop, across the 2kΩ resistor is measured by (i) a 30 kΩ Voltmeter (ii) a 1 kΩ Voltmeter and (iii) Both these Voltmeter connected across. If the voltmeter reading in the three cases are V1, V2 and V3 respectively, arrange these readings in descending order.

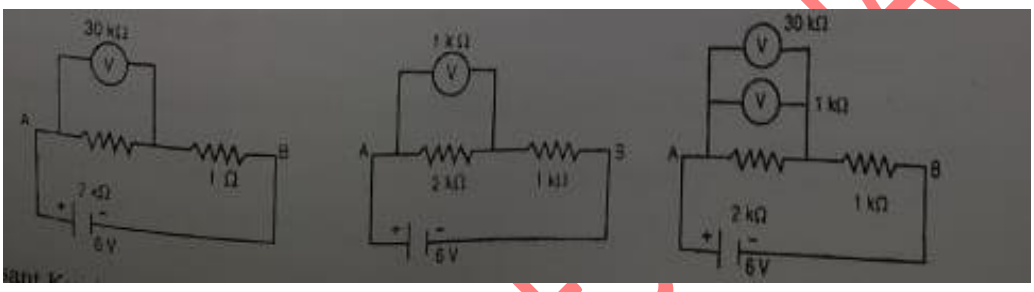

How will the three readings compare the one another if the potential drop were measured across the series combination of the 2kΩ and the 1kΩ resistor i. e. across the point A and B.

Q39. For a potentiometer circuit shown in the given figure, points X and Y represent the two terminals of an unknown emf E. A student observed that when the jockey is moved from the end A to the end B of the potentiometer wire, the deflection in the galvanometer remain in the same direction. What are the two possible faults in the circuit that could result in this observation ?

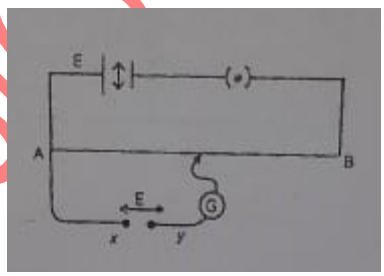

In the galvanometer deflection at the B is

(i)More

(ii)less than at the end A, which of the two faults, listed above, would be there in the circuit? Give reasons in support of your answer in each case.

Q40. A 24 V battery of internal resistance 1.5Ω is connected to three coils of resistance 18Ω, 9Ω and 6Ω in parallel, a resistor of 3.5Ωand reversed battery (emf. 12 V and internal resistance = 3Ω) as shown. Calculate (i) the current in the circuit (ii) current in resistor of 18Ω coil and (iii) p.d. across each battery

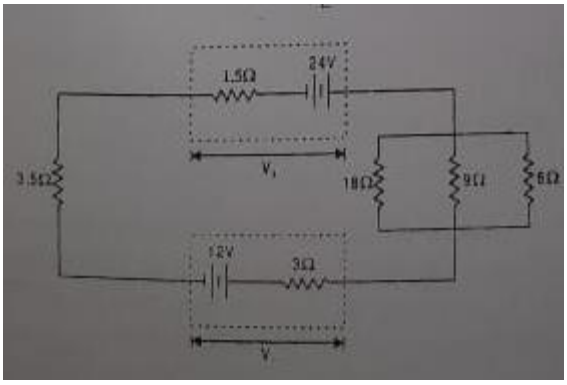

Q41. AB is one metre long uniform wire of 10Ω resistance. The other data are shown in the following circuit diagram given below .

Calculate (i) Potential gradient along AB, and (ii) length AO of the wire, when the galvanometer shows no deflection.

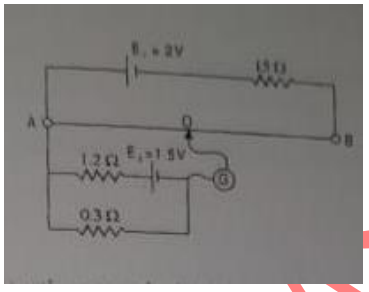

Q41. Find the value of unknown resistance X and the current drawn by the circuit from the battery, if no current flows through the galvanometer. Assume the resistance per unit length of wire AB to be 0.01 Ω/cm.

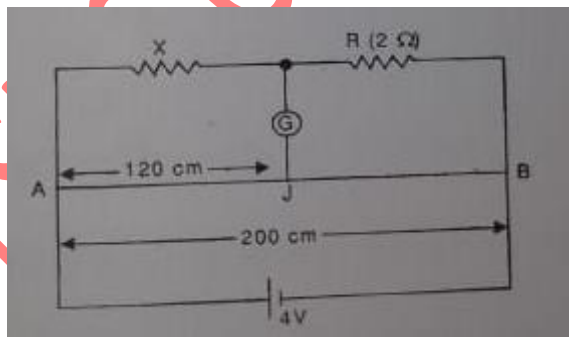

Q42. Calculate the current dawn from the battery in the given network sketched here.

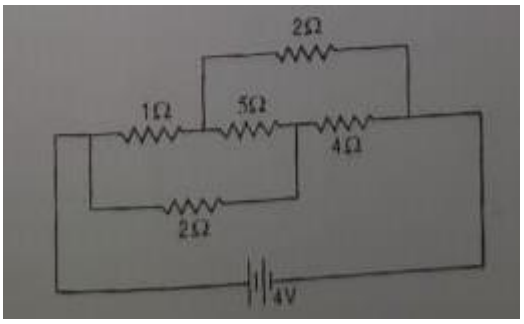

Q43. A voltmeter V of resistance 400Ω is used to measure the potential difference across a 100 Ω resistor in the circuit shows here

(a) What will be the reading on the voltmeter?

(b) Calculate the potential difference across 100 Ω resistor before the voltmeter is connected.

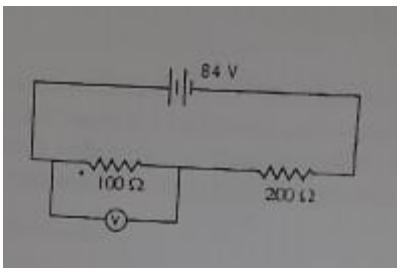

Q44. A potential difference of 2 volt is applied between the points A and B as shown in the network drawn in the figure. Calculate

(i) Equivalent resistance of the network across a point A and B, and

(ii) the magnitudes of the current flowing in the arms AFCEB and AFDEB.

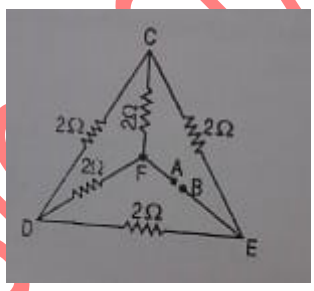

Q45. Using Kirchhoff's law in the given electrical network calculate the value of I_1, I_2 and I_3

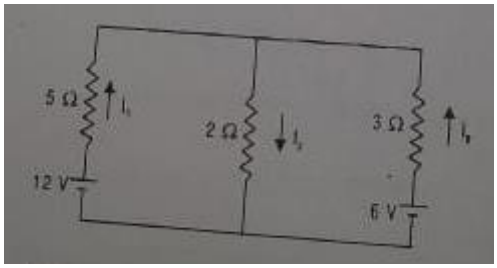

Q46. the variation of potential difference V with length l in case of two potentiometer X and Y is as shown in the given diagram. Which one of these two will you prefer for comparing emf's of two cells and why?

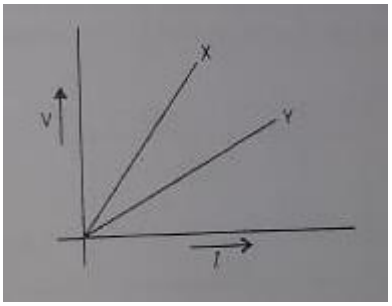

Q47. V-I graph for a metallic wire at two different temperature T1 and T2 is as shown in the following figure. Which of the two temperature is higher and why?

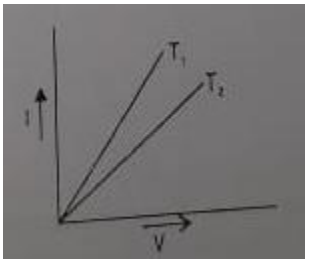

Q48. A d.c supply of 120V is connected to a large resistance X. A voltmeter of resistance 10kΩ Placed in series in the circuit needs 4V. What is the value of X ? What do you thing is the purpose in using a voltmeter instead of an ammeter, to determine the large resistance X?

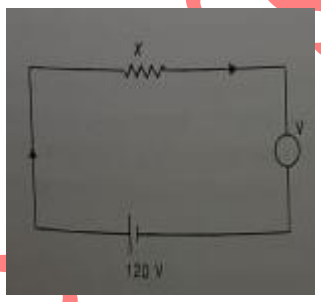

Q49. Find the value of the network resistance X, in the following circuit, if no current flows through the section AO. Also calculate the current drawn by the circuit from the battery of emf. 6V and negligible internal resistance.

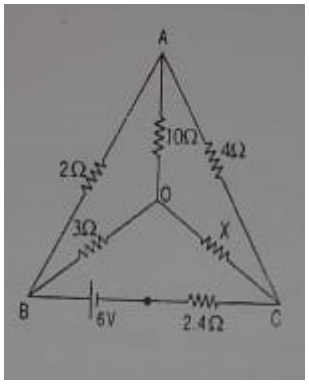

Q50. Six resistors each of value 4Ω are joined together in a circuit as shown in the figure. Calculate equivalent resistance across the points A and B. If a cell of emf. 2V is connected across AB, complete the current through the arms AB and DF of the circuit.

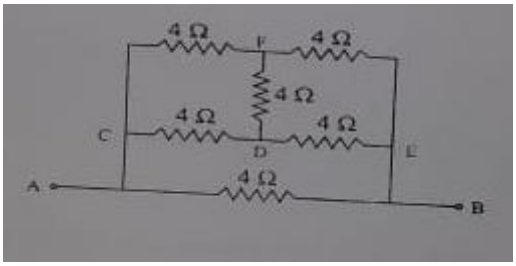

Q51. The voltage- current variation of two metallic wires X and Y at constant temperature are as shown. Assuming that the wires have the same length and the same diameter, explain which of the two wires will have larger resistivity?

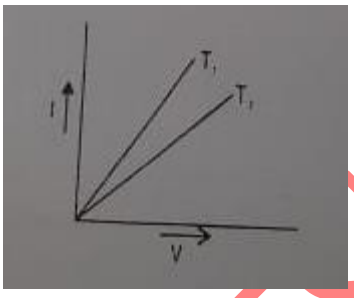

Q52. The circuit diagram shows the use of a potentiometer to measure a small emf production by a thermocouple connected between X and Y, the cell C of emf 2V has negligible internal resistance. The potentiometer wire PQ is 1.00m long and the resistance is 5Ω. The balance point is found to be 400mm from P. calculate the value of emf V, generated by the thermocouple.

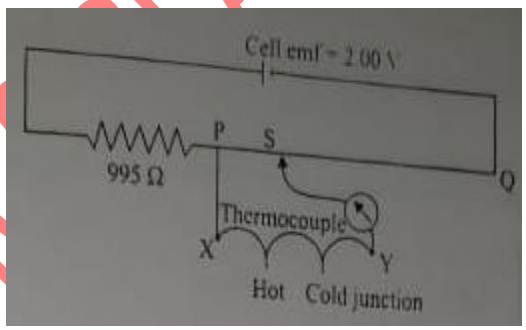

Q53. In the potentiometer circuit shown, the balance (null) point is at X. state with reason, where the balance point will be shifted when.

(i) Resistance R is increased, keeping all parameters unchanged.

(ii) Resistance S is increased, keeping R constant.

(iii) Cell P is replaced by another cell whose e.m.f. is lower than that the cell Q.

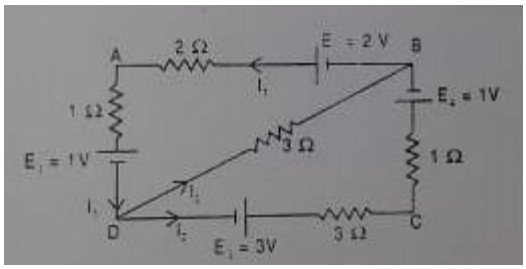

Q54. When two known resistance R and S are connected in the left and right Gaps of a meter bridge, the balance point is found at a distance l1 from the 'zero end' of the meter bridge wire. An unknown resistance X is now connected in parallel to the resistance S and the balance point is now found at distance l2 from the zero end of the meter bridge wire. Obtain a formula for X in terms of l1,l2 and S.

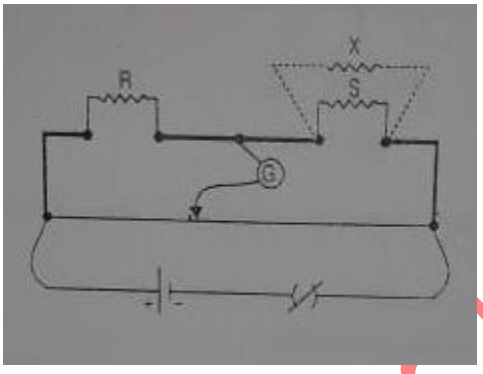

Q55. A potentiometer wire has a length L and Resistance R_0. it is connected to a battery and a resistance combination as shown. Obtain an expression for the potential per length of the potentiometer wire.

What is the maximum emf of a 'test cell' for which one can get a 'balance point' on this potentiometer wire? What precaution should one take, while connecting this test cell in the circuit?

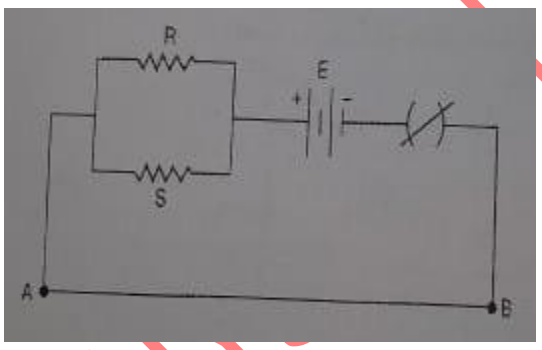

Q56. Two primary cell of emf E1 and E2 (E1 > E2) are connected to the potentiometer wire AB as shown in the figure

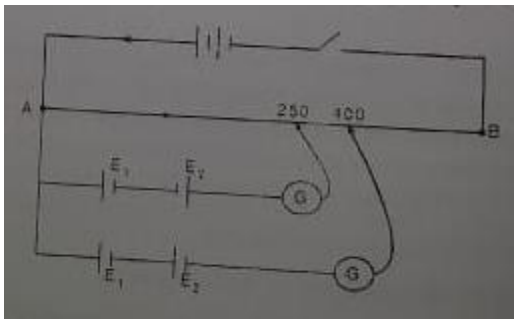

If the balancing lengths for the combinations of the cells are 250cm and 400cm, find the ratio of E1and E2.

Q57. 4 cells of identical emf E internal resistance E1 are connected in series to a variable resistor. The following graph shows the variation of terminal voltage of combination with the current output.

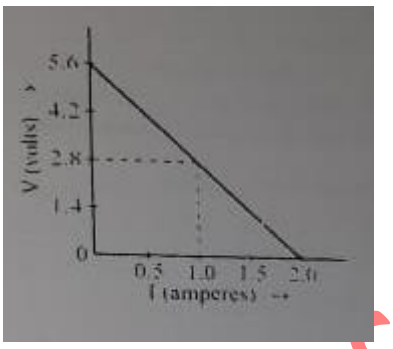

(i) What is emf of each cell used?

(ii) For what current from the cell, does maximum power dissipation occur in the circuit?

(iii) Calculate the internal resistance of each cell.

Q58.In the circuit shown in the fig. find the current through the 4Ω resistor.

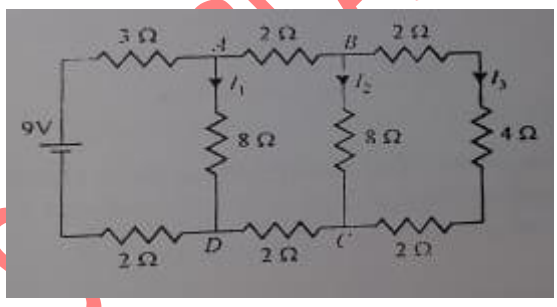

Q59. Fig. shows a cell of emf E and internal resistance r., connected to a voltmeter V and a variable resistance R. Deduce the relationship among V,E,R and r. How will V vary when R is reduced?

Q60. The diagram shows a piece of pure semiconductor, S in series with a variable resistor R, and a source of constant voltage V, would you increase or decrease the value of R to keep the reading of ammeter (A) constant, when semiconductor S is heated? Give reason.

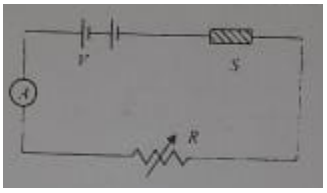

Q61. the V-I graphs of two resistors and their series combination, are shown in the following figure. Which one of these graphs represents the series combination of the other two? Give reason for your answer.

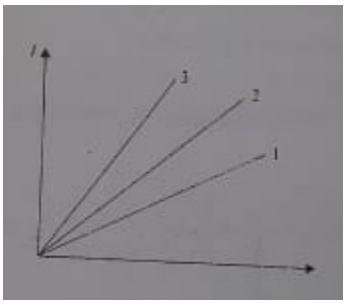

Q62. 12 cells, each of emf 1.5V and internal resistance 0.5Ω, are arranged in m rows each containing n cells connected in series, as shown in the fig. Calculate the values of n and m for which this combination would send maximum current through an external resistance of 1.5Ω.

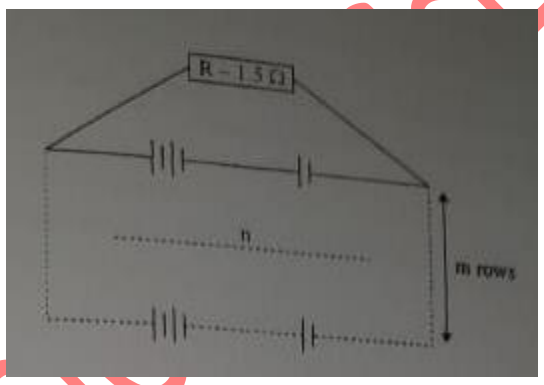

Q63. calculate the value of the resistance R in the circuit shown in the figure so that he current in the circuit in 0.2 A. what should be the potential difference between points A and D?

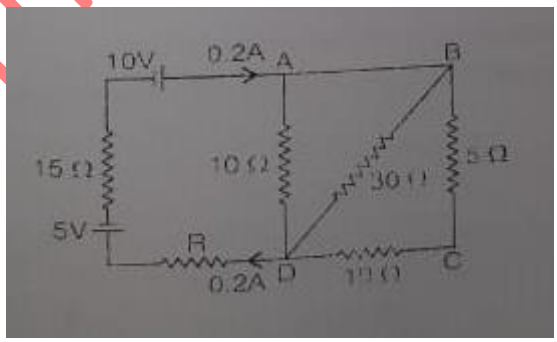

Q64. When electrons drift in a metal from lower to higher potential, does it mean that all the free electrons of the metal are moving in the same direction?

Q65. Two students X and Y perform an experiment on potentiometer separately using the circuit given below

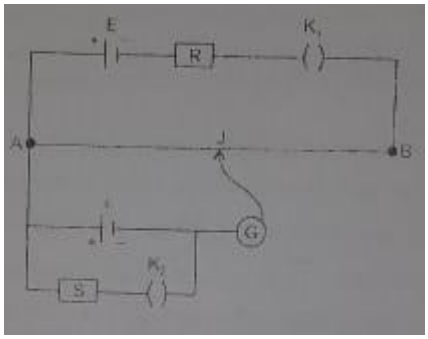

Keeping other parameter changed how will the position of the null point be affected of (i) X increase the value of resistance R in the set up by keeping the key k1 closed and the key k2 open ? (ii) Y decreases the value of resistance S in the set up, while the key K2 remains open and the key K1 closed ?

Q66. Find the current flowing through the resistance R of the circuit shown in the fig. given R1=10, R2 = 20 and R3=30 and the potentials of point 1, 2 and 3 are 10V, 6V and 5V.

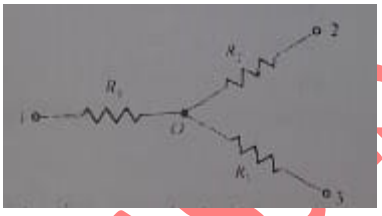

Q67.The variation of the resistance of a metallic conductor with temperature is shown in the figure

(i) Calculate the temperature coefficient of resistance from the graph.

(ii) State why the resistance of the conductor increases with the rise in temperature

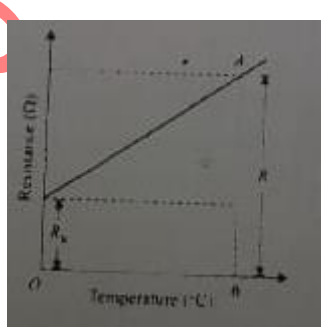

**********THE END **********